Question Booklet Serial No. 000563

COMPETITIVE EXAMINATION — 2011

DATE	PAPER	TIME
27-11-2011	**Assistant Engineer Electrical**	**10:30 am to 12:30 pm**

MAXIMUM MARKS	TOTAL DURATION	MAXIMUM TIME FOR ANSWERING
100	**150 Minutes**	**120 Minutes**

MENTION YOUR REGISTER NUMBER					VERSION CODE	A-3
C	G	4	9	9		

DOs

1. Check whether the Register No. has been entered and shaded in the respective circles on the **OMR** answer sheet.
2. This question booklet is issued to you by the invigilator after the **2nd bell i.e. after 10:25 am.**
3. The question booklet serial number should be entered on the **OMR** answer sheet.
4. The version code of this question booklet should be entered on the **OMR** answer sheet and the respective circles should also be shaded completely.
5. Compulsorily sign at the bottom portion of the **OMR** answer sheet in the space provided.

DON'Ts

1. **The OMR answer sheet should not be damaged / mutilated / spoiled.**
2. The **3rd bell rings at 10:30 am, till then;**
   - Do not remove the seal present on the right hand side of this question booklet.
   - Do not look inside this question booklet.
   - Do not start answering on the **OMR** answer sheet.

IMPORTANT INSTRUCTIONS TO CANDIDATES

1. This question booklet contains 100 (items) questions and each question will have one statement and four answers. (Four different options / responses.)
2. After the 3rd bell is rung at 10:30 am, remove the seal on the right hand side of this question booklet and check that this booklet does not have any unprinted or torn or missing pages or items etc., if so, get it replaced by a complete test booklet. Read each item and start answering on the **OMR** answer sheet.
3. During the subsequent 120 minutes :
   - Read each question (item) carefully.
   - Choose the correct answer from out of the four available responses (options / choices) given under each question / item. In case you feel that there is more than one correct response, mark the response which you consider the best. In any case, choose **only one response** for each item.
   - Completely **darken / shade** the relevant circle with a **blue or black ink ballpoint pen against the question number on the OMR answer sheet.**

Correct Method of shading the circle on the OMR answer sheet is as shown below :

4. Use the space provided at the end of the question booklet for Rough Work. Do not use the **OMR** answer sheet for the same.
5. After the **last bell is rung at 12:30 pm**, stop marking on the **OMR** answer sheet and affix your left hand thumb impression on the **OMR** answer sheet as per the instructions.
6. Hand over the **OMR answer sheet** to the room invigilator as it is.
7. After separating the top sheet (KEA copy), the invigilator will return the bottom sheet replica (candidate's copy) to you to carry home for self-evaluation.
8. Preserve the replica of the **OMR** answer sheet for a minimum period of ONE year.

www.kpscvaani.com

PART – A

1. Which of the following is not a $C++$ keyword ?

   (a) continue (b) friend

   (c) do (d) inter.

2. What is the value of B after the execution of the program segment below ?

```
        XRA    A
        LXI    B,007H
Loop1:  DCX    B
        JNZ    loop1
```

   (a) 6 (b) 1

   (c) 0 (d) 7.

3. The circuit below consists of an ideal Op-Amp & a transistor with $V_{BE} = 0 \cdot 6$ V & $\beta = 150$. The voltage V at the output of the Op-Amp is

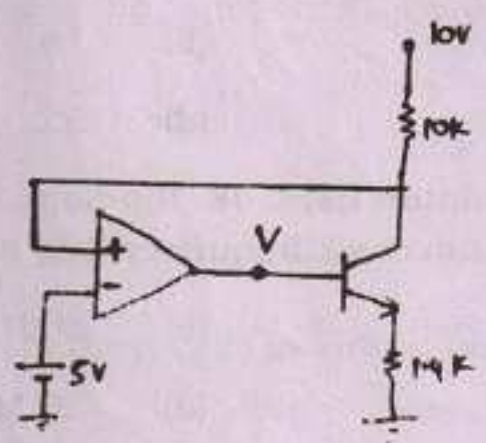

   (a) 1·3 (b) 1·4

   (c) 1 (d) 10.

4. Which of the following sequences have a purely real 8-point DFT $X(k)$?

   (a) [2, 2, 2, 0, 0, 0, 2, 2] (b) [2, 2, 0, 0, 0, 0, – 2, – 2]

   (c) [0, 2, 2, 0, 0, 0, – 2, – 2] (d) none of these.

5. Given $X(0) = 0{\cdot}25$, $X(1) = 0{\cdot}5 - j\,0{\cdot}5$ and $X(3) = 0$ of an 8-point DFT $X(k)$ of a real valued sequence, the $X(5)$ and $X(7)$ are ..... & ..... respectively.

   (a) 0, $0{\cdot}5 - j\,0{\cdot}5$ (b) $0{\cdot}5 + j\,0{\cdot}5$, 0

   (c) $0{\cdot}5 - j\,0{\cdot}5$, 0·25 (d) 0, $0{\cdot}5 + j\,0{\cdot}5$.

www.kpscvaani.com

6. The transfer function of the IIR filter described by the difference equation $y[n] = 0{\cdot}8\, y[n-1] + 0{\cdot}2\, x[n]$ is

(a) $\dfrac{1}{e^{2j\Omega} - 0\cdot 2e^{j\Omega} + 0\cdot 8}$ (b) $\dfrac{0\cdot 2e^{j\Omega}}{e^{j\Omega} - 0\cdot 8}$

(c) $\dfrac{0\cdot 2z}{z - 0\cdot 8}$ (d) $\dfrac{1}{z^2 - 0\cdot 8z + 0\cdot 2}$.

7. The full word complement of 12AB 34CD is

(a) ED54 CB32 (b) ED54 CB33

(c) ED54 C232 (d) ED54 CB30.

8. In a 1-bit comparator, which expression is not used ?

(a) $A \oplus B$ (b) $\overline{A}.\overline{B}$

(c) $\overline{A}.B$ (d) $A.\overline{B}$.

9. The number of complex multiplications involved in 8-point radix – 2 FFT algorithms is

(a) 12 (b) 16

(c) 64 (d) 32.

10. A 4-bit modulo-6 ripple counter uses JK flip-flops. The propagation delay of each flip-flop is 50 ns. The maximum clock frequency that can be used is

(a) 4 MHz (b) 5 MHz

(c) 10 MHz (d) 20 MHz.

11. The hysteresis of the Schmitt trigger (with $V_{sat} = \pm 10V$) shown below is

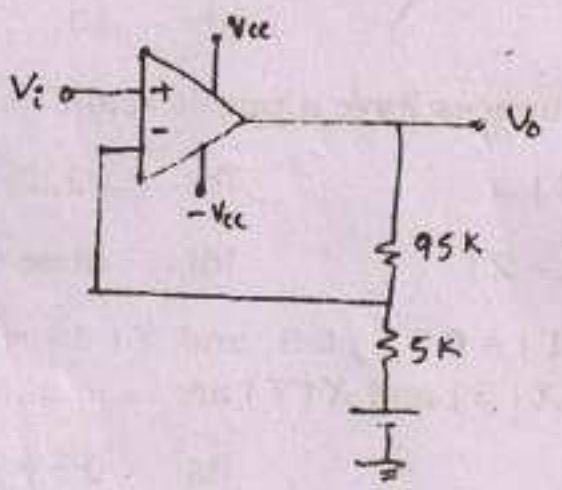

(a) 9·5 (b) 5

(c) 1 (d) 0·9.

www.kpscvaani.com

12. The current in an inductor changes from 0 to 100 mA in 2 ms and induces a voltage of 50 m V. The value of the inductor is ..... mH.

(a) 1 (b) 2

(c) 4 (d) 8.

13. The damping ratio of the characteristic equation $s^2 + 4s + 16 = 0$ is

(a) 1·2 (b) 0·8

(c) 0·5 (d) 0·1.

14. When the pole of a system is on the imaginary axis, the system is

(a) stable (b) unstable

(c) absolutely stable (d) marginally stable.

15. The inverse Fourier transform of the function $F(\omega) = \frac{1}{j\omega}\pi\delta(\omega)$ is

(a) $\sin \omega t$ (b) $\cos \omega t$

(c) $\sin(t)$ (d) $u(t)$.

16. The Laplace transform of the current $i(t)$ in circuit below is

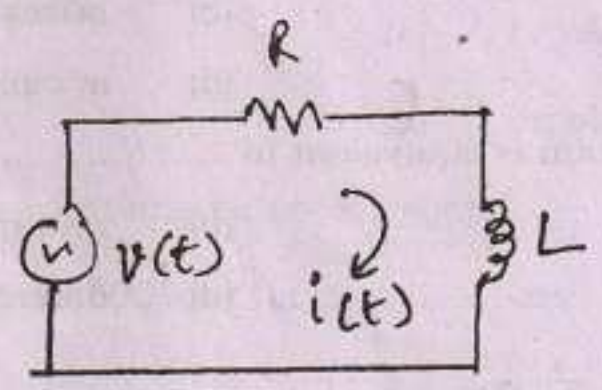

(a) $\frac{V(s)}{RL + s}$ (b) $\frac{V(s)}{R + Ls}$

(c) $\frac{V(s)}{R + L/s}$ (d) $\frac{V(s)}{RL + 1}$

www.kpscvaani.com

17. The peak current through the resistor in figure below assuming an ideal diode is ..... mA.

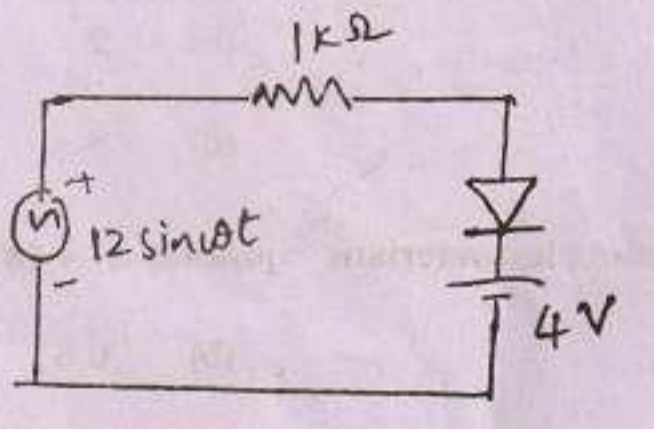

(a) 12 (b) 4

(c) 16 (d) 8.

18. The closed loop transfer function of the control system shown below is

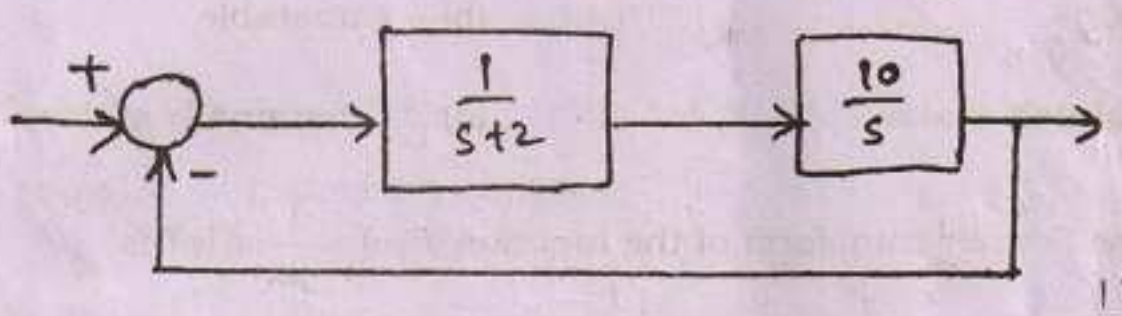

(a) $\frac{10}{s^2+2s}$ (b) $\frac{1}{s^2+2s+10}$

(c) $\frac{1}{s^2+2s-10}$ (d) $\frac{10}{s^2+2s+10}$.

19. The ..... is generally not used in a DMA transfer.

(a) registers (b) buses

(c) memory (d) accumulator.

20. Modulation in time domain is equivalent to ..... in frequency domain.

(a) addition (b) multiplication

(c) convolution (d) differentiation.

21. The summation $y[n] = \sum_{k=0}^{9} \alpha^k \beta^{n-k}$ is

(a) $\frac{\beta^n\left(1-(\alpha/\beta)^{10}\right)}{1-(\alpha/\beta)}$ (b) $\frac{\beta^n}{1-(\alpha/\beta)}$

(c) $\frac{\beta^n}{1-(\alpha\beta)}$ (d) $\frac{\beta^n\left(1-(\alpha\beta)^9\right)}{1-(\alpha\beta)}$.

www.kpscvaani.com

22. The ROC of a right sided infinite length sequence is

(a) entire z-plane excluding $z = \infty$

(b) entire z-plane excluding $z = 0$ & $z = \infty$

(c) exterior to the circle of radius d_{max} in the z-plane

(d) interior to the circle of radius d_{max} in the z-plane.

23. The ..... signal is an aperiodic signal.

(a) $8\cos(12t + 3)$ (b) e^{j3t}

(c) $\cos(3\pi n)^2$ (d) $\cos(4n)$.

24. The waveform below represents

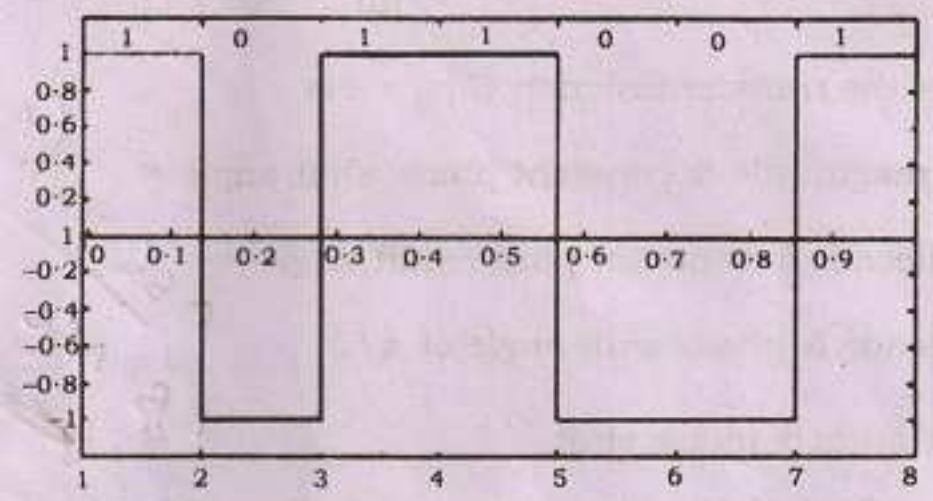

(a) unipolar NRZ (b) bipolar NRZ

(c) unipolar RZ (d) bipolar RZ.

25. The Nyquist interval for sampling an analog signal

$s(t) = 6\sin(500\pi t) + 8\sin(10000\pi t)$ is ..... ms.

(a) 1 (b) 10

(c) 0·1 (d) 0·01.

26. Which of the following MATLAB commands implements an IIR filter ?

(a) Remez (b) Yulewalk

(c) Blackman (d) Boxcar.

www.kpscvaani.com

27. SAR ..... counter type ADC.

(a) is slower than (b) is equivalent to

(c) is faster than (d) uses less logic than.

28. Y in logic circuit below is

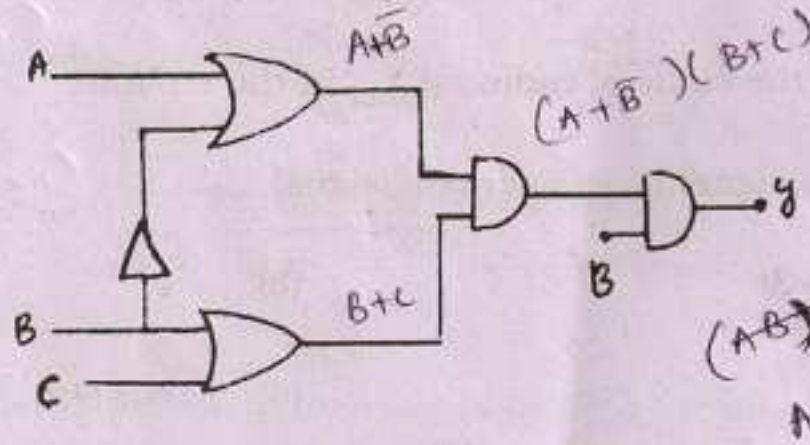

(a) AB (b) BC

(c) $A + BC$ (d) $AB + C$.

29. The Bode plot of the transfer function $G(s) = s$ is

(a) constant magnitude & constant phase shift angle

(b) – 20 dB/decade & constant phase shift angle

(c) 20 dB/decade & phase shift angle of $\pi/2$

(d) zero magnitude & phase shift.

30. In choosing an ADC, the resolution required is 50 mV and V_{ref} = 10V. The number of bits in ADC required is

(a) 7 (b) 8

(c) 9 (d) 200.

31. The system represented by $y(t) = e^{x(t)}$ is

(a) linear & time-invariant (b) linear & time-varying

(c) nonlinear & time-invariant (d) nonlinear & time-varying.

32. The energy of the rectangular pulse $x(t) = A$ for $0 \le t \le T$ is

(a) A (b) AT

(c) A^2T (d) AT^2.

www.kpscvaani.com

33. The straight line equation of $x_2(t)$ in figure below is

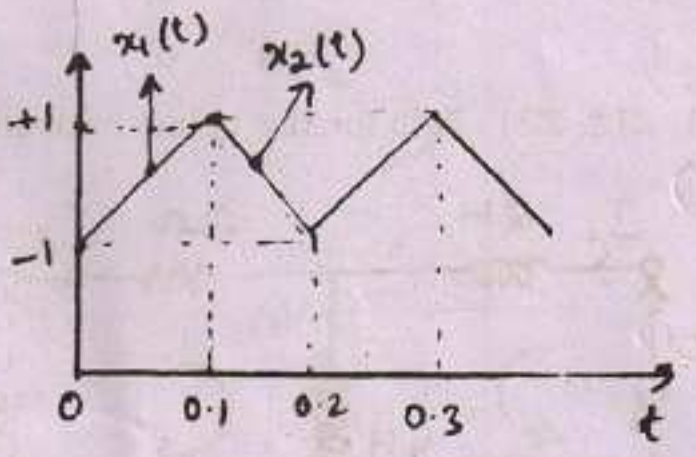

(a) $20t - 1$ (b) $-20t + 1$

(c) $20t + 3$ (d) $-20t + 3$.

34. The even part of the signal $x[n] = [1, 2, \underset{\uparrow}{3}, 4, 5]$ is

(a) $[2, 2, \underset{\uparrow}{2}, 2, 2]$ (b) $[3, 3, \underset{\uparrow}{3}, 3, 3]$

(c) $[1, 2, \underset{\uparrow}{3}, 4, 5]$ (d) $[5, 4, \underset{\uparrow}{3}, 2, 1]$.

35. Given $x(t)$ as shown in fig. (A) below, $y(t)$ in fig. (B) expressed in terms of $x(t)$ is

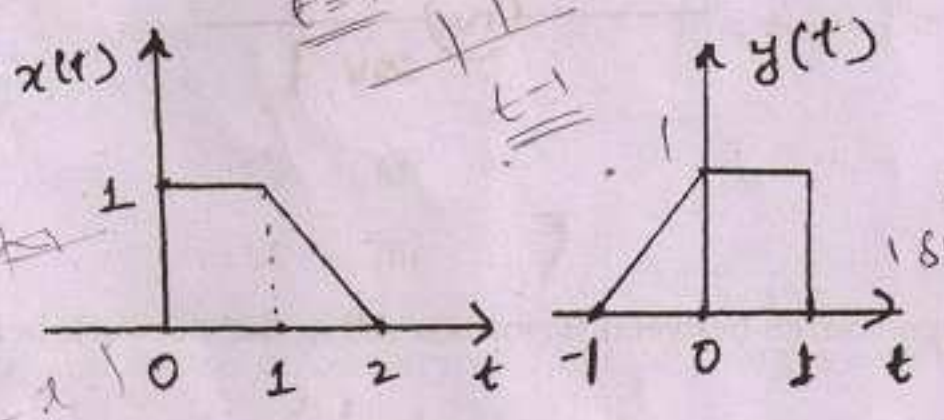

(A) (B)

(a) $x(-t)$ (b) $x(t-1)$

(c) $x(-t-1)$ (d) $x(-t+1)$.

36. The SOP expression for $f(ABC) = \sum(0, 1, 3, 4, 6, 7)$ is

(a) $\overline{A}\,\overline{B} + BC + A\overline{C}$ (b) $A\overline{B} + \overline{B}C + AC$

(c) $AB + B\overline{C} + \overline{A}C$ (d) $AB + A\overline{B} + \overline{A}C$.

www.kpscvaani.com

37. Given $x[n] = [1, 2, 3]$, the $X[4]$ in the 8-point DFT $X(k)$ is

(a) $1 - j$ (b) $2j$

(c) 2 (d) 6.

38. The Z parameters ($Z11$, $Z12$, $Z21$, $Z22$) for the below network are

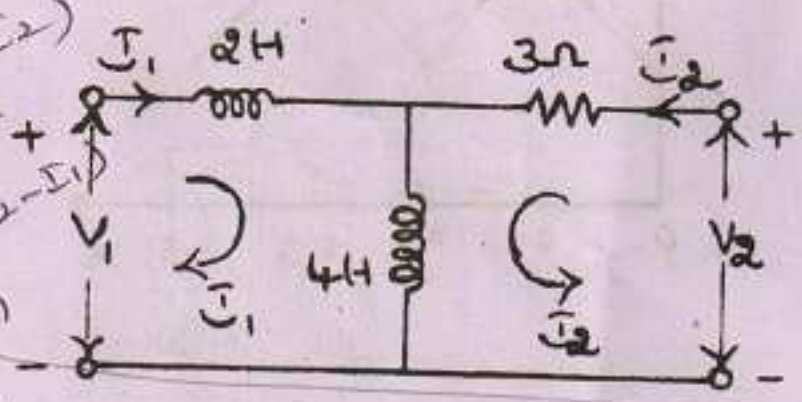

(a) 6s, 4s, 4s, 3 + 4s (b) 6s, – 4s, – 4s, 3 + 4s

(c) 6, 4, 4, 7 (d) 6, – 4, – 4, 7.

39. The current at half power frequency in the below network is

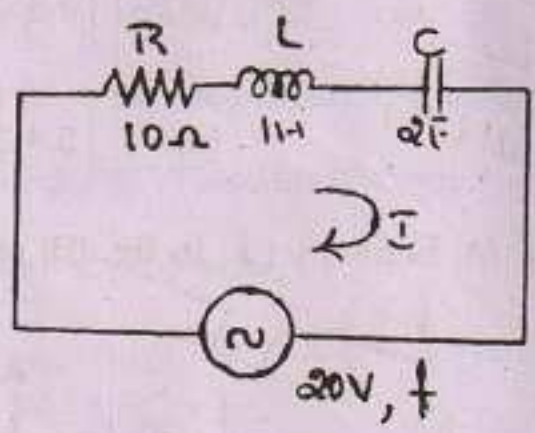

(a) 0 (b) $\sqrt{2}$

(c) 2 (d) $2\sqrt{2}$.

40. The single voltage source between terminals AB in the network below is

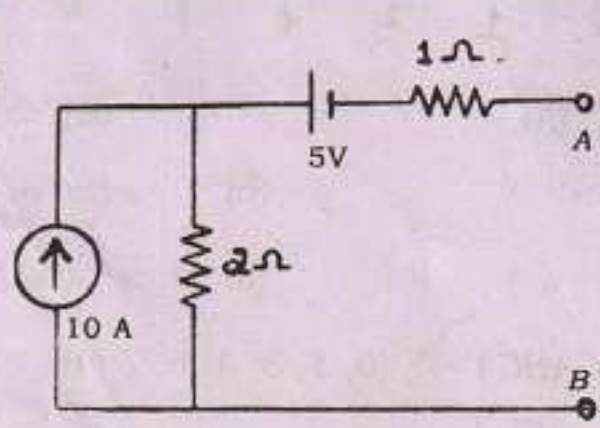

(a) 25V, 3 Ω (b) 25V, 2/3 Ω

(c) 15V, 2/3 Ω (d) 15V, 3 Ω.

www.kpscvaani.com

41. The equivalent resistance between terminals AB in figure below is

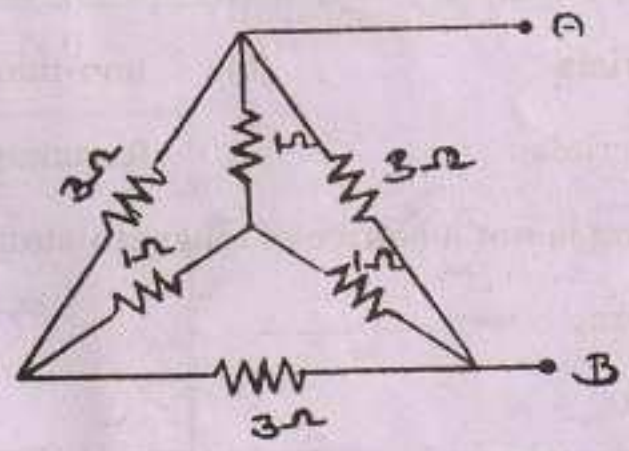

(a) 1 Ω (b) 1·5 Ω
(c) 3 Ω (d) 4·5 Ω.

42. The node voltages V_1, V_2, V_3 in the below network are

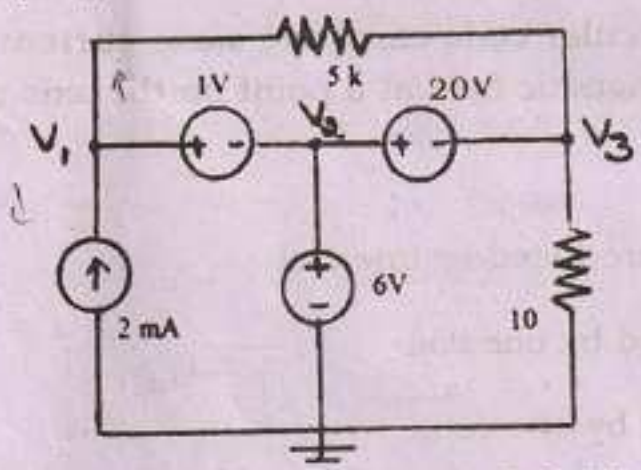

(a) 5, 6, 14 (b) 7, 6, 26
(c) – 5, 6, – 26 (d) 7, 6, – 14.

43. Magnetic flux density at a point distant R due to an infinitely long linear conductor carrying a current I is given by

(a) $B = \frac{I}{2\mu\pi R}$ (b) $B = \frac{\mu I}{2R}$
(c) $B = \frac{\mu I}{2\pi R}$ (d) $B = \frac{\mu I}{2\pi R^2}$.

44. For the oriented graph shown below, which of the following is a valid cut set ?

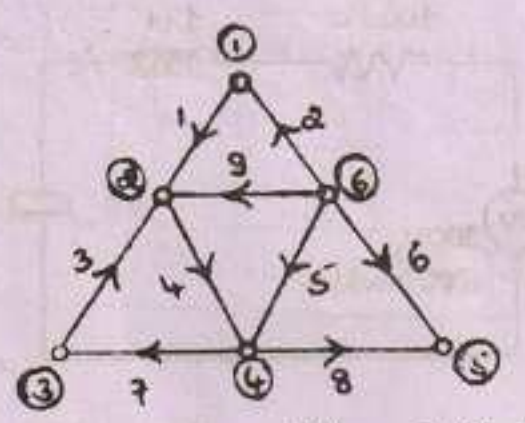

(a) 1, 9, 4, 7, 6 (b) 1, 9, 5, 8
(c) 1, 9, 4 (d) 6, 8, 5.

www.kpscvaani.com

45. The relative permeability is slightly more than 1 in case of

(a) diamagnetic materials (b) non-magnetic materials

(c) paramagnetic materials (d) ferromagnetic materials.

46. Which one of the following is not a source of magneto-static field ?

(a) DC current in a wire

(b) Permanent magnet

(c) An accelerated charge

(d) An electric field linearly changing with time.

47. Two identical coaxial circular coils carry the same current I but in opposite directions. The magnitude of the magnetic field at a point on the axis midway between the coils is

(a) zero

(b) the same as that produced by one coil

(c) twice that produced by one coil

(d) half that produced by one coil.

48. If an isolated conducting sphere in air has radius $= \frac{1}{4\pi\varepsilon_0}$, its capacitance will be

(a) zero (b) 1 F

(c) 4π F (d) ε_0 F.

49. The values of Z_L for maximum power transfer and the maximum power transferred in circuit below are

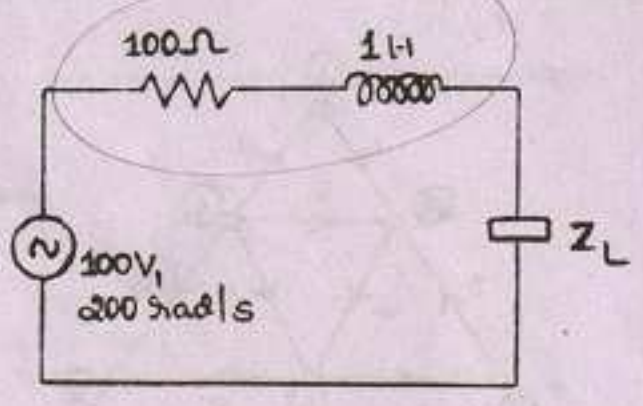

(a) $100 + j\,1,25$ (b) $100 - j\,1,25$

(c) $100 + j\,200,25$ (d) $100 - j\,200,25$.

www.kpscvaani.com

50. The switch K is changed from position 1 to 2 at $t = 0$, steady state been reached before switching. The value of $i(0+)$ is

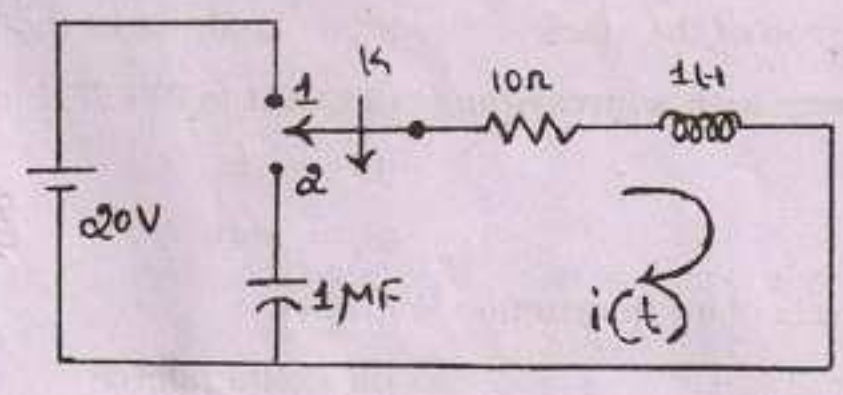

(a) 0 (b) ∞

(c) 2 (d) -2.

51. If $\bar{r} = \hat{x}x + \hat{y}y + \hat{z}z$ and $r = |\bar{r}|$, then $(\bar{r}\nabla)r^2$ is

(a) 0 (b) $2r^2$

(c) r^3 (d) $3r^3$.

52. The circuit below represents ..... operation at V_0.

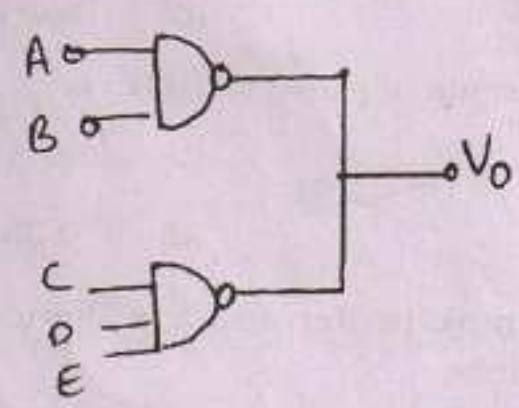

(a) OR (b) AND

(c) XOR (d) NAND.

53. The below circuit represents a mod ..... counter.

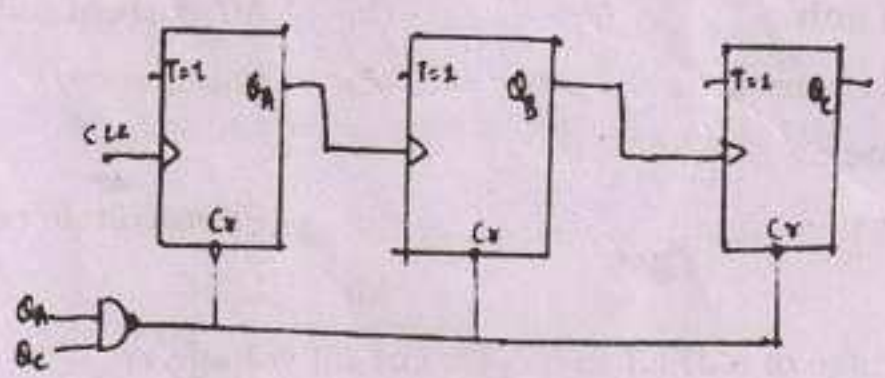

(a) 5 (b) 6

(c) 4 (d) 3.

www.kpscvaani.com

54. The stack pointer in a processor contains

(a) contents of the top of the stack (b) contents of the bottom of the stack

(c) address of the top of the stack (d) address of the bottom of the stack.

55. The size of the memory with address range 0FC00H to 0FFFFH is

(a) 256 (b) 1k

(c) 10k (d) 64k.

56. The first machine cycle of an instruction is always

(a) op code fetch (b) data fetch

(c) I/O fetch (d) memory write.

57. The ..... instruction has an immediate source operand.

(a) MOV R1, 32 (b) MOV R1, @32

(c) MOV R1, &32 (d) MOV R1, #32.

58. Vertical amplifier in a CRO is designed for a

(a) constant gain bandwidth product (b) high gain

(c) large bandwidth (d) low input impedance.

59. The rise time of a CRO in terms of pulse width *tp* is

(a) *tp* (b) *tp* / 2π

(c) $\sqrt{tp}$ / 2π (d) 0·35 *tp*.

60. If *R* is the resistance of the voltmeter and *r* is the resistance connected in series, the voltage extension range will be

(a) *r* / *R* (b) *R*/ *r*

(c) (*R* + *r*) / *r* (d) *r* / (*R* + *r*).

61. A moving coil permanent magnet ammeter can be used to measure

(a) DC current only (b) AC current only

(c) AC and DC current (d) impedance.

62. A load cell consists of

(a) Strain gauge (b) Photovoltaic cell

(c) Thermistor (d) LDR.

63. The pinch-off voltage of a JFET is 5V. Its cut-off voltage is

(a) √5 (b) 2·5

(c) 5 (d) $(5)^{\frac{3}{2}}$.

www.kpscvaani.com

64. The JFET when properly biased acts as a

(a) current controlled current source (CCCS)

(b) CCVS

(c) VCVS

(d) VCCS.

65. The diodes shown in figure below have zero resistance and a cut-in voltage. If the cut-in voltage of diode D_1 is 0·2 V and diode D_2 is 0·6 V, the current I_1 and I_2 are ..... & ..... mA.

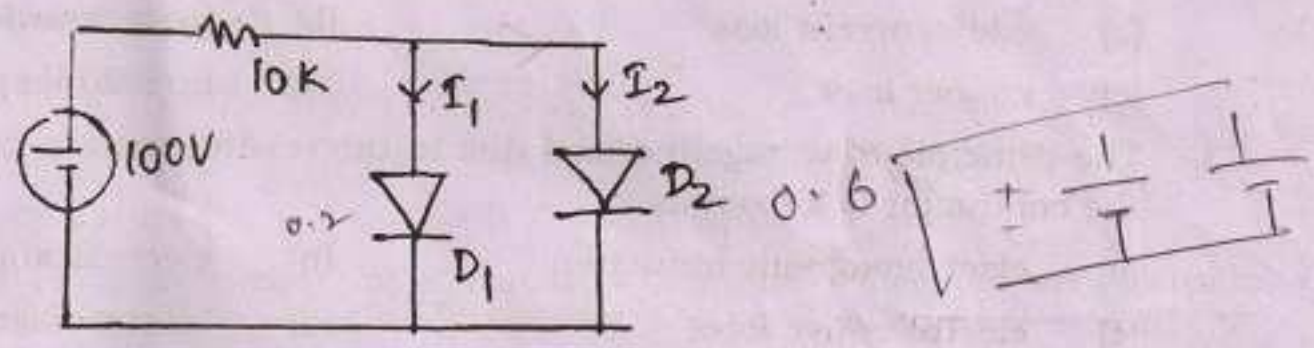

(a) 10, 0 (b) 0, 10

(c) 9·98, 0 (d) 0, 9·94.

66. The typical turn-off time of a transistor is

(a) 10 ns (b) 40 ns

(c) 60 ns (d) 70 ns.

67. The ..... amplifier configuration yields the highest power gain.

(a) *CB* (b) *CE*

(c) *CC* (d) *EB*.

68. In case of root locus plot, the angle of asymptote is 360 divided by the number of

(a) zeros (b) poles

(c) poles + zeros (d) poles – zeros.

69. A lag compensation network usually consists of ..... elements.

(a) *R, C* (b) *L, C*

(c) *R, L, C* (d) *R, L*.

70. 'Bool' is a new ..... included in ANSI *C* ++.

(a) data type (b) operator

(c) header (d) namespace scope.

www.kpscvaani.com

PART – B

SECTION – A

(ELECTRICAL)

71. Which of the following motors is preferred when quick speed reversal is main consideration ?
    (a) Squirrel cage induction motor (b) Wound rotor induction motor
    (c) Synchronous motor (d) DC motor.

72. When a magnetic material is taken through a cycle of magnetization and demagnetization, the energy wasted per cycle is known as
    (a) eddy current loss (b) hysteresis loss
    (c) copper loss (d) no load loss.

73. The principle of voltage induced due to the relative motion between magnetic field and the conductor is known as
    (a) electromagnetic induction (b) electrostatic induction
    (c) electromotive force (d) electromagnetic force.

74. For a circuit breaker, the short circuit making current is expressed in
    (a) r.m.s. value (b) average value
    (c) instantaneous value (d) peak value.

75. The value of various resistances connected in parallel will be
    (a) lesser than the least value of individual resistance
    (b) sum of all resistances
    (c) equal to the greatest value of individual resistance
    (d) equal to the smallest value of individual resistance.

76. The algebraic sum of all currents in a junction is zero means
    (a) there are no current in any branch
    (b) the sum of all incoming currents is equal to the sum of all outgoing currents
    (c) the difference of all incoming currents is zero
    (d) the difference of all outgoing currents is zero.

77. By increasing the area of cross-section of a conductor, the value of resistance
    (a) increases (b) decreases
    (c) does not change (d) has no effect.

78. The sudden three phase short circuit test on a synchronous machine reveals
    (a) negative sequence reactance
    (b) zero sequence reactance
    (c) quadrature axis reactance
    (d) sub-transient and transient reactance.

www.kpscvaani.com

79. In a double cage induction motor, the outer cage winding has

(a) low resistance and high reactance (b) low resistance and low reactance

(c) high resistance and low reactance (d) high resistance and high reactance.

80. When the voltage wave leads the current wave by 30° in an alternating current circuit, the power factor of the circuit is

(a) leading (b) zero

(c) lagging (d) unity.

81. The cogging and crawling of an induction motor is due to

(a) 1st and 3rd Harmonics (b) 2nd and 4th Harmonics

(c) 5th and 7th Harmonics (d) unbalance in voltage.

82. In an ideal parallel LC resonant circuit, the impedance

(a) approaches zero value (b) approaches infinite value

(c) approaches constant value (d) varies with LC values.

83. The graph of load *vs* field current for a constant terminal voltage of an alternator is a/an

(a) open circuit curve (b) load curve

(c) short circuit curve (d) *V* curve.

84. In an 8-pole wave wound DC generator, the number of parallel paths in the armature is

(a) 8 (b) 6

(c) 4 (d) 2.

85. Sparking in the brushes of a DC generator can be minimized by

(a) using low resistance carbon brushes

(b) using a strong spring to hold the brushes against commutator

(c) using high resistance carbon brushes

(d) matching the curvature of brush contact surface with that of commutator.

86. When you want to use a generator for general lighting or battery charging, you prefer

(a) a shunt generator

(b) a series generator

(c) a cumulatively compounded generator

(d) a differentially compounded generator.

87. The torque in an induction motor is proportional to

(a) applied voltage (b) square of the voltage

(c) $\frac{1}{\sqrt{3}}$ voltage (d) $\sqrt{3}$ voltage.

www.kpscvaani.com

88. In an ungrounded system, a single line to ground fault on one line causes

(a) increase in voltage of healthy lines

(b) decrease in voltage of healthy lines

(c) no change in the voltages of healthy lines

(d) zero voltage in all lines.

89. The speed of a DC motor

(a) can be controlled (b) cannot be controlled

(c) can only be increased (d) can only be reduced.

90. A series motor is used for traction purpose, only because

(a) its starting speed is high (b) its starting current is low

(c) its starting torque is high (d) there is no back emf.

91. A starter used in starting a motor

(a) introduces large resistance in armature circuit and progressively cuts off as the handle is moved

(b) introduces a small resistance in armature circuit and progressively introduces larger resistance as the handle is moved

(c) introduces high resistance in the field circuit which is cut off as the handle is moved

(d) introduces low resistance in the field which increases as the handle is moved.

92. The principle on which a transformer works is based on

(a) self induction (b) mutual induction

(c) power transfer (d) leakage reactance.

93. The no-load current in a transformer has a

(a) high power factor (b) low power factor

(c) unity power factor (d) zero power factor.

94. The change in secondary terminal voltage from no load to full load condition expressed as percentage of full load voltage is known as

(a) voltage stability (b) voltage variation

(c) voltage regulation (d) regulated voltage.

www.kpscvaani.com

95. The efficiency of a transformer is maximum when

(a) iron loss is greater than copper loss

(b) copper loss is greater than iron loss

(c) copper loss is equal to iron loss

(d) both losses are high.

96. The difference between the speed of rotating magnetic field and the actual speed of motor is known as

(a) differential speed (b) accelerating speed

(c) pulsating speed (d) slip.

97. The speed of a squirrel cage induction motor can be altered by

(a) introducing additional resistance in the rotor circuit

(b) introducing slip frequency voltage into the rotor circuit

(c) cascade control

(d) changing the supply voltage to the stator.

98. The motor that is usable with both AC and DC supply is

(a) Single phase induction motor (b) Capacitor motor

(c) Shaded pole motor (d) Universal motor.

99. The most common fault that occurs in a power system is

(a) line to ground (b) line to line

(c) 3 phase to ground (d) line to line and ground.

100. For high frequency power supply to induction furnace, the equipment used is

(a) Coreless transformer (b) Current transformer

(c) Motor generator set (d) Multiphase transformer.

www.kpscvaani.com

SECTION – B

(ELECTRONICS)

71. An array comprises two dipoles that are separated by half wavelength. If the dipoles are fed by currents that are 180° out of phase with each other, then array factor is

(a) $\sin((\pi/4)\cos\theta + \pi/4)$ (b) $\cos((\pi/4)\cos\theta + \pi/2)$

(c) $\sin((\pi/2)\cos\theta + \pi/2)$ (d) $\cos((\pi/2)\cos\theta + \pi/2)$.

72. The power spectral density of white noise

(a) varies as square of frequency (b) varies as square root frequency

(c) varies as inverse frequency (d) is constant with frequency.

73. Orthogonal signals $S_1(t)$ and $S_2(t)$ satisfy the relation $\int_0^T S_1(t)S_2(t)\,dt =$

(a) 0 (b) 1

(c) $\frac{\pi}{2}$ (d) π.

74. The IF is 455 kHz in a superheterodyne receiver. If it is tuned to 1200 kHz, then image frequency will be

(a) 745 k (b) 910 k

(c) 1655 k (d) 2110 k.

75. If modulation index of an AM wave is changed from 0 to 1, the transmitted power

(a) increases by 50% (b) increases by 75%

(c) increases by 100% (d) remains unaffected.

76. A mast antenna consisting of a 50 m long vertical conductor operates over a perfectly conducting ground plane. It is base-fed at a frequency of 600 kHz. The radiation resistance of the antenna in ohms is

(a) $\frac{\pi^2}{5}$ (b) $\frac{4\pi^2}{5}$

(c) $8\pi^2$ (d) $20\pi^2$.

77. An example of signal attribute in VHDL is

(a) image (b) base

(c) high (d) event.

78. The ..... is not a design unit in VHDL.

(a) entity (b) architecture

(c) signal (d) configuration.

www.kpscvaani.com

79. The ..... is not a scalar data type in VHDL.
(a) enumerated (b) numeric
(c) physical (d) file.

80. On execution of '10001010' *rol* 2, we get
(a) 00101000 (b) 00101010
(c) 00101001 (d) 00100010.

81. Replicating any set of concurrent statements in VHDL is done by using
(a) replicate statement (b) generate statement
(c) entity (d) signal.

82. In VHDL, the data type STD_ULOGIC has ..... values.
(a) 2 (b) 4
(c) 8 (d) 9.

83. If the transmission channel with a bandwidth (BW) of 135 kHz is to transmit a binary signal using raised cosine pulses at a Nyquist BW of 90 kHz, the roll-off factor β is
(a) 0 (b) 0·5
(c) 1 (d) 1·5.

84. The vertical width in an eye diagram indicates
(a) voltage (b) current
(c) ISI (d) time.

85. The max power efficiency for a sine wave message signal when amplitude modulated is
(a) 100% (b) 50%
(c) 33·3% (d) 25%.

86. In vestigial-sideband (VSB) modulation scheme ..... is transmitted.
(a) 2 full sidebands
(b) 1 full sideband
(c) 1 sideband plus a trace of second sideband
(d) trace of only one sideband.

87. The following figure is an example of ..... waveform.

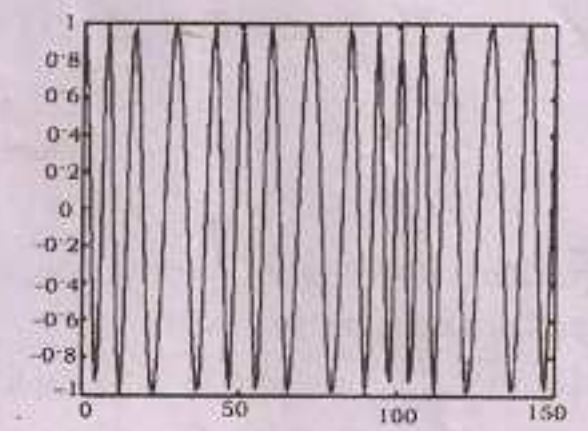

(a) AM (b) PM
(c) FM (d) DM.

www.kpscvaani.com

88. AVC in AM receivers implies

(a) Automatic Volume Control (b) Automatic Voltage Control

(c) Audio Voltage Control (d) none of these.

89. Given the generator matrix $G = [\ 11111\ ]$, the code word x for a signal message bit $m = 1$ is

(a) [00000] (b) [01001]

(c) [11111] (d) [00001].

90. The hamming distance between $x = 1100$ & $y = 1011$ is

(a) 0 (b) 1

(c) 2 (d) 3.

91. The generator matrix for the convolutional code shown is

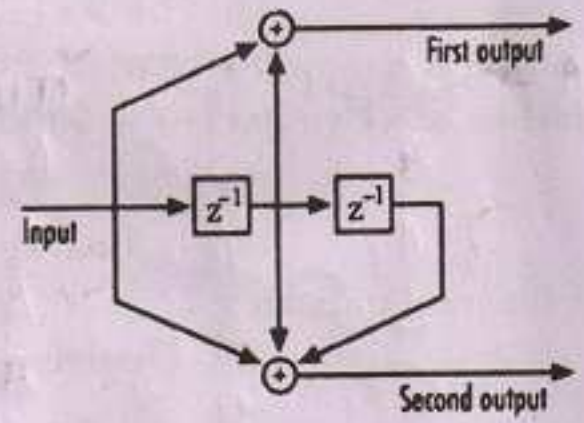

(a) $\begin{bmatrix} 110 \\ 111 \end{bmatrix}$ (b) $\begin{bmatrix} 111 \\ 111 \end{bmatrix}$

(c) $\begin{bmatrix} 01 \\ 10 \end{bmatrix}$ (d) $\begin{bmatrix} 101 \\ 010 \end{bmatrix}$.

92. Given the minimum distance $d_{min} = 5$ of a linear block code, it can correct ..... errors.

(a) 0 (b) 2

(c) 4 (d) 6.

93. A source output a message bit with a probability $P = 1/4$. The information content of this message bit is

(a) 1 bit (b) 2 bits

(c) 3 bits (d) 4 bits.

94. Given W = Channel bandwidth, S = Signal power, N = Noise, the channel capacity C according to Shannon-Hartley theorem is

(a) $C = W \log e\,(1 + S/N)$ (b) $C = W \log 2\,(1 + S/N)$

(c) $C = \log e\,(W + S/N)$ (d) $C = \log 2\,(W + S/N)$.

www.kpscvaani.com

95. Frequency content of a studio quality audio signal extends from 20 Hz to 20 kHz. The signal is sampled at a rate of 48 k samples/s. The PCM used makes use of 16 bits per sample. The final bit rate is ..... bps.

(a) 48 k (b) 40 k

(c) 640 k (d) 768 k.

96. Given the signal $m(t) = 10 \cos(2000\pi t) . \cos(8000\pi t)$. What is the minimum sampling rate based on the band pass sampling theorem ?

(a) 5 k (b) 4 k

(c) 8 k (d) 16 k.

97. The following figure represents the receiver of ..... modulator.

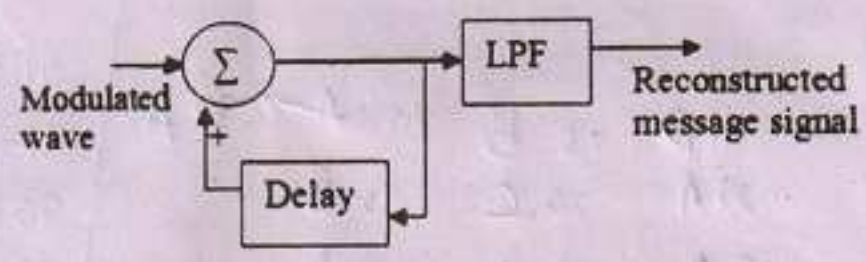

(a) delta (b) frequency

(c) phase (d) amplitude.

98. The critical frequency of an ionosphere layer is 10 MHz. What is the maximum launching angle from the horizon for which 20 MHz wave will be reflected by the layer ?

(a) 0° (b) 30°

(c) 45° (d) 90°.

99. The bit rate of a digital communication system is 34 M bit/s. The modulation scheme is QPSK. The baud rate of the system is

(a) 68 M bit/s (b) 34 M bit/s

(c) 17 M bit/s (d) 8·5 M bit/s.

100. The image channel rejection in a superheterodyne receiver comes from

(a) IF stage only (b) RF stage only

(c) detector & RF stage (d) detector, RF & IF stages.

==========

www.kpscvaani.com

SPACE FOR ROUGH WORK

12AB 34CD

0001 0010 1010 1011

0011 0100 1100 1101

1011 0011 0010

B 3 2

1 D
2 A
3 A
4 A
5 B
6 B
7 B
8 B
9 A
10 B
11 C
12 A
13 C
14 D
15 C
16 B
17 D
18 D
19 D
20 C
21 A
22 C
23 D
24 B
25 C
26 B
27 C
28 A
29 C
30 B
31 C
32 B
33 D
34 B
35 D
36 A
37 C
38 A
39 B
40 D
41 A
42 D
43 D
44 B
45 C
46 C
47 A
48 B
49 D
50 C
51 D
52 B
53 A
54 C
55 B
56 A
57 D
58 A
59 D
60 C
61 A
62 A
63 C
64 D
65 C
66 D
67 B
68 D
69 A
70 A
71 B
72 D
73 A
74 D
75 A
76 C
77 D
78 C
79 D
80 B
81 B
82 D
83 B
84 C
85 C
86 C
87 C
88 A
89 C
90 D
91 A
92 B
93 B
94 B
95 D
96 A
97 A
98 B
99 A
100 C

A-3

501

www.kpscvaani.com